55” INNOVATE EDGE 4K TOUCH TABLE

FEATURES

- 40-Point PCAP Touch
- 4K Resolution Screen
- Spill Proof
- 100% Flat Touch Surface

Introducing a modern touch table with an incredible sleek design and a 55” 4K display that is virtually bezeless! Not only is this table inviting, but it will captivate attention in even the busiest settings. Easy and simple set up makes this the perfect collaboration tool for any event!

SPECIFICATIONS

Resolution	3840x2160 px @ 60 Hz
Panel	AMVA3
Viewing Area	47.6" x 26.8"
Brightness	450 cd/m2
Aspect Ratio	16 9
Contrast	4000 1
Viewing Angle	178 degrees H/V
Colors	16.7 Mil
Response Time	8 ms
Touch Technology	InGlass Touch Technology
Touch Points	40 Touch-Points
Touch Accuracy	<2mm
Touch Response Time	<15 ms
Touch Reporting Rate	100 Hz
Touch Resolution	19354x10886
Dimensions	51.2" x 30.3" x 3.3"
VESA Mount	500 x 500mm (19.7" x 19.7")
Orientation	Landscape & Portrait Mode
Weight	40 Kg
Operating Conditions	
Continuous Operation	24 / 7
Power Consumption	300W max
Speakers	2 x 10W
Surface / Glass	Edge to edge flush design - no bezel
Processor	T5810 Workstation with GTX980 Graphics Card and WIN10
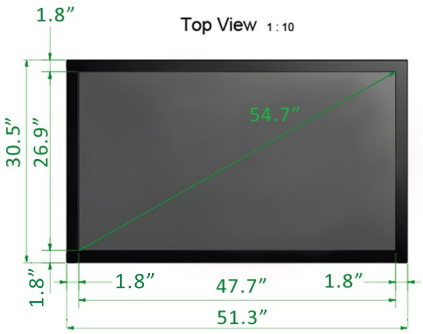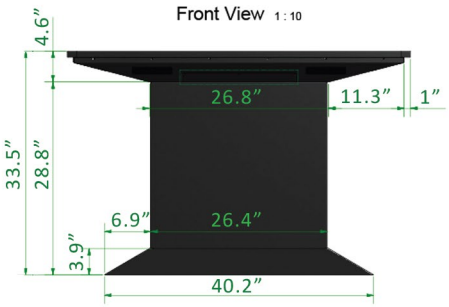
DIMENSIONS